GENERAL INFORMATION FOR DOWNLIGHTS

REGGIANI
WE SPEAK LIGHT

HPF control gears

All kinds of lamps, whether discharge or fluorescent require a device to control the power supply current. This task can be performed by electromagnetic control gear whose characteristics correspond to those of the lamp in question. In other words, a non-specific control gear cannot power a lamp.
The most economical way of powering a lamp is to use an electromagnetic control gear, which is known to have long life (over 25 years) providing the indications given in the assembly instructions provided with all luminaires are respected (for example: never cover a recessed Luminaire and its control gear with insulating material, and do not recess surface-mounted Luminaires – even if only partially).
To ensure the lamps function correctly – and to avoid reducing their chromatic yield and life – it is equally important to ensure that the power supply voltage is almost completely constant, that is, with a tolerance of +/-3% with respect to the rated value. Any fluctuation beyond the values indicated may seriously damage the lamp. Electromagnetic control gear is not however capable of stabilising the voltage, so the mains voltage must guarantee the constancy required. As a result, when a Luminaire using electromagnetic Control Gear is purchased, the rated power supply voltage and frequency values must be specified, so that the most suitable control gear may be identified.
The life of the lamp is very important. In fact, when a lamp burns out, the "rectifying effect" occurs, thus restoring the control gear, and therefore also the ballast, to their maximum operating conditions.
For this reason, all Reggiani control gears are equipped with self-resetting thermal device. The electromagnetic ballast must be fitted (except in systems with centralised phasing) with a capacitor with power factor correction that limits the reactive power, and therefore the current in the circuit. A reduced current enables the cross section of the cables to be decreased, thus making the systems more economical and reducing heat losses. Having realised the benefits given by the capacitor with power factor correction, Reggiani adopts this device in all its luminaires using electromagnetic control gear.
The rectifying effect that occurs with a burnt out lamp also has negative effects on the capacitor with power factor correction itself. For this reason, Reggiani luminaires with HPF control gear are also equipped with safe capacitors, designed in respect of the latest CEI EN 61048:2000-11 standards.
When discharge lamps (metal halide and sodium vapours) are used, the electromagnetic ballast and the capacitor must be fitted with an Ignitor, essential to generate the high voltage pulse (up to 5kV) necessary to start the lamp.
The safest Ignitor is the superimposed type – adopted by Reggiani – which does not use the control gear to produce the high voltage necessary for starting. In fact, the control gear, which must withstand the high voltage, may find itself in a critical situation whenever the lamp does not start, as the starting command is persistent.
Bearing in mind these problems, the safest combination – is HPF control gear – A ballast with thermal protection, a capacitor (manufactured in accordance with the standards mentioned above) and a timed Ignitor. The latter has the advantage of stopping the starting command after a pre-set time (maximum 20 minutes), thus avoiding unnecessary stress on the control gear.
This is what Reggiani has done, adopting in its control gears a digital superimposed timed Ignitor – with timed control of the pulse by means of a microprocessor – which also enables the control gear to be installed from a remote location, a reduction of radio emissions and hot re-ignition times.
Another advantage of HPF control gears is that they respect the European Electromagnetic Compatibility Directives, so there is no need for interference filters.

HF control gears for metal halide lamps, 220/240 v ac 50/60 hz

Metal halide lamps may benefit considerably from the use of HF control gears. Lamps are sensitive to sudden changes in voltage – which affect their chromatic yield and their life – and the use of a HF control gears enables the changes in Colour temperature of the lamp according to the voltage to be maintained within narrower tolerance limits.

The main advantages of HF control gears are:

— no strobe effect;

— control of lamp voltage independent of the mains voltage;

— improved colour stability irrespective of the mains voltage, for the entire life of the lamp;

— longer life of the lamp as a result of controlled ignition and hot re-ignition;

— rapid, automatic disconnection of a burnt out lamp from the mains power supply, to prevent it from exploding;

— rapid cold ignition (50% of the luminous intensity is reached in half the time required by HPF control gears);

— energy saving, due to limited power supply losses;

— Broad working voltage limits (198-264V), which cancels the effects of sudden changes in the mains power supply, which is particularly useful in environments where operating machines (heat pumps, air-conditioning systems, industrial refrigerators, mixers, etc.) are installed. In these situations, luminaires equipped with a HPF control gear should not be used; while the adoption of a HF control gear, with luminaires distributed equally across the three phases, solves the problems caused by sudden changes in voltage.

In luminaires with remote control gear, the HF control gear is more flexible than conventional control gear; in fact, it can be set at a maximum distance of 3m from the Luminaire, maintaining the level of radiated electromagnetic interference unchanged.

HF control gears for fluorescent lamps, 220/240 v ac 50/60 hz.

Current fluorescent lamps – sensitive to sudden changes in voltage, which drastically reduce their chromatic yield and life – may benefit from the use of HF control gears, as they maintain the luminous flux within narrower tolerance limits and considerably reduce energy losses.

In brief, the main advantages of HF control gears are:

— no strobe effect during normal operation, due to the high working frequency > = 40 kHz;

— noise-free operation, an important characteristic for environments that require absolute silence, or at least the absence of background noise (theatres, concert halls, etc.);

— lamp voltage control independent of the mains voltage;

— improved stability of the luminous flux, irrespective of the mains voltage, for the whole life of the lamp;

— longer life of the lamp (with an increase of 30-50% compared to a conventional control gear), due to controlled ignition and hot re-ignition. This characteristic is what makes the HF control gear the most suitable device for applications which require more than three power on/off cycles a day;

— rapid, automatic disconnection of the mains power supply when a fault is found in the lamp;

— energy saving, due to the limited power supply losses (25-30% less than those of a HPF control gear); CELMA classification: A1/A2

— broad working voltage limits (198-264V), which cancel out the fluctuations in the mains power supply, which is particularly useful in environments where operating machines (heat pumps, air-conditioning systems, industrial refrigerators, mixers, etc.) are installed. In these situations, luminaires equipped with a HPF control gear should not be used; while the adoption of a HF control gear, with luminaires distributed equally across the three phases solves the problems caused by sudden changes in voltage;

— direct current operation, in installations with an emergency light, in accordance with the VDE0108 standard.

— Important: When connecting independent control gears in cascade, "a maximum of six luminaires can be used*
*when using the terminals of the control gears themselves.

Tables for ballast-lamp classification.

Classification of ballast-lamp circuits for energy efficiency in lighting

Linear				CLASS				
Lamp type	Lamp		Ilcos code	A1	A2	A3	B1	B2
T	50HZ	HF						
	15W	13.5W	FD-15-E-G13-26/450	under consideration	≤16W	≤18W	≤21W	≤23W
	18W	16W	FD-18-E-G13-26/600		≤19W	≤21W	≤24W	≤26W
	30W	24W	FD-30-E-G13-26/895		≤31W	≤33W	≤36W	≤38W
	36W	32W	FD-35-E-G13-26/1200		≤36W	≤36W	≤41W	≤43W
	38W	32W	FD-38-E-G13-26/1047		≤36W	≤40W	≤43W	≤45W
	58W	50W	FD-56-E-G13-26/1500		≤55W	≤59W	≤64W	≤67W
	70W	60W	FD-70-E-G13-26/1800		≤68W	≤72W	≤77W	≤80W

Compact 2 tubes				CLASS				
Lamp type	Lamp		Ilcos code	A1	A2	A3	B1	B2
TC-L	50HZ	HF						
	18W	16W	FSD-16-E-2G11	under consideration	≤19W	≤21W	≤24W	≤26W
	24W	22W	FSD-24-E-2G11		≤25W	≤27W	≤30W	≤32W
	36W	32W	FSD-36-E-2G11		≤36W	≤38W	≤41W	≤43W
		40W	FSD-40-LP-2G11		≤44W	≤46W		
		55W	FSD-55-LP-2G11		≤59W	≤63W		

Compact 4 tubes flat				CLASS				
Lamp type	Lamp		Ilcos code	A1	A2	A3	B1	B2
TC-F	50HZ	HF						
	18W	16W	FSS-18-E-2G10	under consideration	≤19W	≤21W	≤24W	≤26W
	24W	22W	FSS-24-E-2G10		≤25W	≤27W	≤30W	≤32W
	36W	32W	FSS-36-E-2G10		≤36W	≤38W	≤41W	≤43W

Compact 4 tubes				CLASS				
Lamp type	Lamp		Ilcos code	A1	A2	A3	B1	B2
TC-D / TC-DE	50HZ	HF						
	10W	9.5W	FSO-10-E-G24q=1 FSO-10-I-G24d=1	under consideration	≤11W	≤13W	≤14W	≤16W
	13W	12.5W	FSO-13-E-G24q=1 FSO-13-I-G24d=1		≤14W	≤16W	≤17W	≤19W
	18W	16.5W	FSO-18-E-G24q=2 FSO-18-I-G24d=2		≤19W	≤21W	≤24W	≤26W
	26W	24W	FSO-26-E-G24q=3 FSO-26-I-G24d=3		≤27W	≤29W	≤32W	≤34W

Compact 6 tubes				CLASS				
Lamp type	Lamp		Ilcos code	A1	A2	A3	B1	B2
TC-T / TC-TE	50HZ	HF						
	18W	16W	FSM-18-I-GX24d=2 FSM-18-E-GX24q=2	under consideration	≤19W	≤21W	≤24W	≤26W
	24W	24W	FSM-26-I-GX24d=3 FSM-26-E-GX24q=3		≤27W	≤29W	≤32W	≤34W
		32W	FSMH-32-UP-GX24q=4		≤36W	≤39W		
		42W	FSMH-42-UP-GX24q=4		≤46W	≤49W		

Compact 2 D				CLASS				
Lamp type	Lamp		Ilcos code	A1	A2	A3	B1	B2
TC-DD/TC-DDE	50HZ	HF						
	10W	9W	FSS-10-E-GR10q FSS-10-L/P/H-GR10q	under consideration	≤11W	≤13W	≤14W	≤16W
	16W	14W	FSS-16-I-GR8 FSS-16-E-GR10q FSS-16-L/P/H-GR10q		≤17W	≤19W	≤21W	≤23W
	21W	19W	FSS-21-E-GR10q FSS-21-L/P/H-GR10q FSS-28-I-GR8		≤22W	≤24W	≤27W	≤29W
	28W	25W	FSS-28-E-GR10q FSS-28-L/P/H-GR10q		≤29W	≤31W	≤34W	≤36W
	38W	34W	FSS-38-E-GR10q FSS-38-L/P/H-GR10q		≤38W	≤40W	≤43W	≤45W
		34W	FSS-65-E-GRY10q=3 FSS-65-L/P/H-RY10q=3		≤59W	≤63W		

1-10 v DC dimmable hf control gears, 220/240 v ac 50/60 hz

The evolution of lighting systems is towards a more rational use of light sources. In this sense, an important role is played by dimming/regulating systems, of which the 1-10 V DC analogue version represents the simplest and most economical solution.
The typical applications of these systems are offices, conference rooms, cinemas, and
theatres, that is, all environments in which a fine adjustment of the lighting is necessary.
luminaires normally work in combination with other devices (presence detectors, light sensors, etc.), so as to obtain different kinds of control systems, which may be classified as follows.

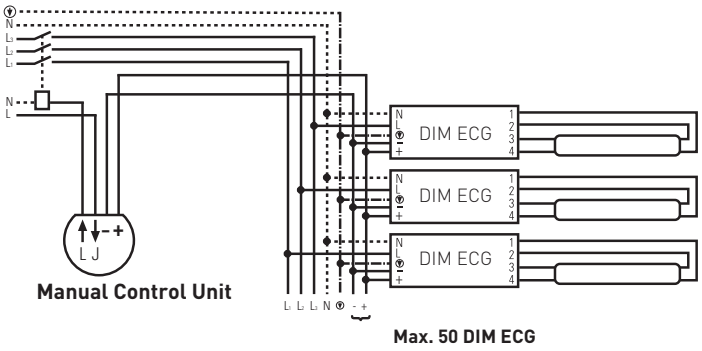

Automatic Control
By combining dimmable luminaires with presence and light sensors, the emission of light is optimised, with energy saving of up to 60%, and the higher initial cost of the luminaires is covered in the medium term.

Building Automation
In addition to the automatic light control system, light control is centralised through the use of computers and dedicated software.

The use of dimmable luminaires imposes the following functional restrictions:
— if the room temperature is less than 15°C, ignition of the lamps may represent a problem, especially if the flux is regulated to the minimum; in this case, to facilitate power-on, the flux must be regulated to the maximum;
— during regulation, the flux and colour temperature of the lamp may vary; they will stabilise within a time of about 30-40 minutes; this effect may be accentuated with

Digital dimmable HF control gears 220/240 v ac 50/60 hz

There are lighting systems that require high visual comfort, a flexible and creative use of light as a fundamental component of the architecture of interiors and maximum energy efficiency.
Other requirements include the necessity to balance artificial light with natural light, to have power-on controlled by presence detectors and to integrate lighting with other building automation systems (anti-intrusion control, fire-fighting control etc.). Well, not only are all these requirements satisfied, the emission of light can be optimised to obtain an energy saving of 60%, which enables the higher initial cost of the luminaires to be covered in the medium term.

In fact, we now have a new standard of HF control gears, which may be interconnected on an interference-free digital communication network, called "DALI".
DALI is not a system but the definition of an interface, the same for all manufacturers, which allows communication between a control module and the HF control gears, on a digital network of up to 64 users. Each individual HF control gear can be identified (addressed) and programmed through the control module; in addition, each Luminaire can be assigned to 16 freely definable groups, irrespective of its actual position, and can save up to 16 different technical lighting values (scenarios). As each HF control gear can be assigned to more than one group, an infinite number of scenarios can be designed, with a smaller number of components than that required by comparable system (1-10V).

But the functional advantages of a DALI HF control gears go well beyond the possibilities offered by the 1-10V interface:
— each HF control gear can return operating status signals (for example, lamp ON/OFF, lamp current or lamp fault), which are an essential condition for integrating lighting devices into the most complex building control systems);
— the system can be set so that all the HF control gears reach the desired level of regulation at the same time, even if they start from different levels of illuminance;
— there are no limits to the number of changes between on/off statuses because they can be executed directly through a digital signal without having to use relays;
— the luminous flux can be regulated from 1-100%, with a logarithmic curve. As the human eye is sensitive to changes in the flux – in particular between 0 and 10% – irregularities and rapid changes are annoying, and only a digital device with a logarithmic regulation enables a pleasant, gradual increase in the flux from 1 to 100%;
— the regulating times can be programmed;
— the maximum distance between the control module and the most distant Luminaire is 300m, if the cross section of the signal cable is at least 1.5 mm^2;
— a five-pole cable can be used, or the control cables can be laid with the mains voltage cables, providing an NYM 5x1.5 mm^2 cable is used.

The fact that the DALI system is easy to use emerges as soon as it is put into operation. In fact, the routines for detecting and addressing the components connected, present in the control module, are largely automatic; the user simply has to complete the settings, such as diversify the scenarios or modify the groups of luminaires.

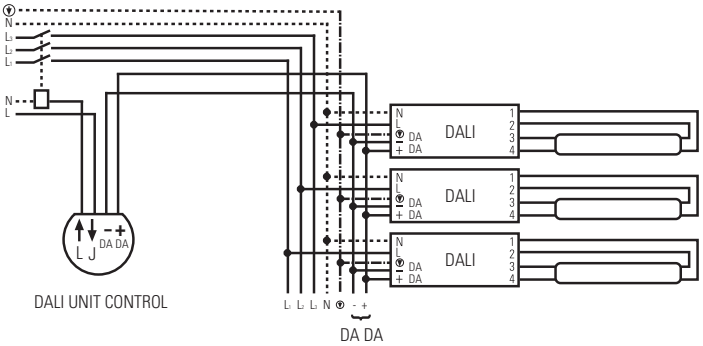

Electric lighting installations. informative notes.

To ensure that the luminaires equipped with a HF control gear function correctly,the following design constraints of the electrical system must be respected:

— split the luminaires equally between the three power supply phases;

— systems with fluorescent lamps: connect a maximum of 48 1x18W-1x42W luminaires or 20 2x32W-2x42W Luminaires, under the same thermal circuitbreaker of the C-16A type (these limits are calculated considering a power supply cable with a length of 15m, and 2.5mm² wires; to size the cables correctly, reference should be made to the relevant standard while – to identify the actual consumption – reference should be made to the CELMA table);

— systems with a HF control gear and discharge lamps: connect a maximum of 15 35W Luminaires, or 10 70-150W Luminaires, under the same thermal circuit breaker of the C–16A type (these limits are calculated considering a power supply cable with a length of 15m, and 2.5mm² wires; to size the cables correctly, reference should be made to the relevant standard);

— systems with HPF control gear and discharge lamps: connect a maximum of 12 35W Luminaires, or 10 70W luminaires and 6 150W Luminaires, under the same thermal circuit breakerof the C–16A type (these limits are calculated considering a power supply cable with a length of 15m, and 2.5mm² wires; to size the cables correctly, reference should be made to the relevant standard);

— discharge Luminaires: connect the terminal – identified by the symbol ⚡/Lamp of the control gear – to the corresponding pole/terminal, also identified on the luminaire;

— another factor that affects the size of the power supply cables is the emission of the harmonic currents allowed for the Luminaires. The 61000-3-2:/A14:2001 standard establishes – for all luminaires with an input current of less than 16A – the harmonic current limits indicated in the table below.

HARMONIC DISTORTIONS OF SUPPLY CURRENT

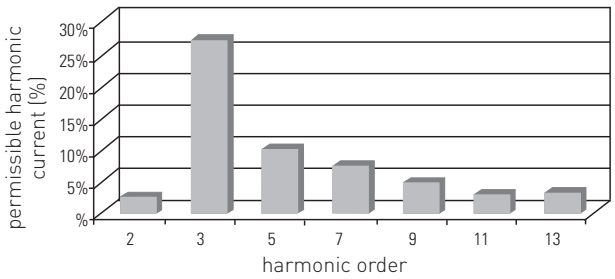

To complete the information about the contribution of the harmonic currents in a lighting system, we provide the following table, which indicates the consumption values in themstationary state, for the power values of the various control gears, and the value of themharmonic components up to the 13th.

HF control gears for fluorescent lamps

	13W	2x13W	18W	2x18W	26W	2x26W	32W	2x32W	42W	2x42W
In	0,080	0,16	0,1	0,19	0,14	0,26	0,17	0,34	0,22	0,46
2ª	0,002	0,003	0,002	0,004	0,003	0,005	0,003	0,007	0,004	0,009
3ª	0,022	0,043	0,027	0,051	0,038	0,070	0,046	0,092	0,059	0,124
5ª	0,008	0,016	0,010	0,019	0,014	0,026	0,017	0,034	0,022	0,046
7ª	0,006	0,011	0,007	0,013	0,010	0,018	0,012	0,024	0,015	0,032
9ª	0,004	0,008	0,005	0,010	0,007	0,013	0,009	0,017	0,011	0,023
11ª	0,002	0,005	0,003	0,006	0,004	0,008	0,005	0,010	0,007	0,014
13ª	0,002	0,005	0,003	0,006	0,004	0,008	0,005	0,010	0,007	0,014

HF control gears for metal halide lamps

	35W	70W	150W
In	0,210	0,4	0,75
2ª	0,004	0,008	0,015
3ª	0,057	0,108	0,203
5ª	0,021	0,040	0,075
7ª	0,015	0,028	0,053
9ª	0,011	0,020	0,038
11ª	0,006	0,012	0,023
13ª	0,006	0,012	0,023

HPF control gears for metal halide lamps

	35W	70W	150W
In	0,530	0,98	1,8
2ª	0,011	0,020	0,036
3ª	0,143	0,265	0,486
5ª	0,053	0,098	0,180
7ª	0,037	0,069	0,126
9ª	0,027	0,049	0,090
11ª	0,016	0,029	0,054
13ª	0,016	0,029	0,054

As a precaution, the protection device is to be chosen bearing in mind the CEI EN 60598-1:2001 standard for Luminaires, which limits the current dispersion on the ground wire to 1mA for every class I luminaire installed.
Finally, even if the control gear is class II, to reduce electromagnetic interference to a minimum, the earth wire should be connected.

Emergency luminaires for fluorescent lamps

There are two categories of safety or emergency Luminaires:
— permanent: emergency lamps are powered even when the normal lighting is working;
— non-permanent: the emergency lamps are only turned on when the ordinary

In addition, the emergency Luminaires – in particular, those manufactured by Reggiani – are of a combined type (in a Luminaire containing two or more lamps, at least one is powered by the emergency circuit) or self-contained (all the elements – battery, control unit, power-off and signalling devices – are incorporated in or adjacent to the Luminaire; in the latter case, the remote pack must respect some requirements, such as the IP 40 protection degree, isolation class II and essentially of allowing use as an independent element).

The operating modes laid down by the EN 60598-2-22 standard are equally important:
— The emergency luminaires must be suitable for direct installation on normally inflammable surfaces (see F mark);
— in combined Luminaires, if the emergency circuit lamps and the normal power supply lamps are different, the types must be clearly identified, while the emergency
Lampholders must be marked with a green spot, visible during replacement of the lamp (the emergency circuit lamps must always be of the 4-pin type);
— the self-contained emergency luminaires must have a signalling device visible during normal use (for example, an LED), which indicates when the battery is being charged, electrical continuity and the functioning of the emergency lamp.

The batteries used in the Reggiani packs are Ni/Cd (of the 3.6V-4Ah type for lamps of up to 26W FSQ, and 6 V-4Ah for 32/42W FSMH lamps); they do not require maintenance and normally give at least four years of normal operation. During emergency operation, which starts when the mains voltage drops below 85% of its standard value, the luminaires must be activated within 0.5s, provide 50% of the declared luminous flux within 5s, and provide – after 60s and continuatively – the rated luminous flux for the entire time assigned to emergency operation (which is one hour in all European countries except for Great Britain where it is three hours). The luminous flux guaranteed in an emergency is between 10% and 20% of the luminous flux provided during normal operation.

The time required to recharge the batteries must not exceed 24 hours, or – in public environments (for example, hotels) – 12 hours. To ensure the efficiency and life of the emergency pack, it must be installed at the greatest possible distance from the Luminaire body (the distance allowed by the cables provided). Every six months, the functioning of the emergency lighting system should be tested and the batteries should be completely discharged and subsequently recharged, while every four years (and, naturally, whenever the specified duration of power has not been respected), the batteries should be replaced.

If the Luminaire is powered by a three-phase system, two separate lines of the same phase must be used. The preferential line to the emergency pack must never be disconnected, except for maintenance operations. With regard to this, the Reggiani emergency packs offer the interesting function of remote power-off. To do this, the disabling circuit simply has to be closed on terminals 3 and 4 of the pack, connected, respectively, to the (+) and (-) poles of a 9V battery, so as to avoid switching to emergency operation. Up to 10 luminaires may be connected to the battery in parallel.

Transformers for low voltage lamps

Low-voltage lamps – the most common of which are the dichroic lamps – generally require a power supply voltage of 12V, even though there are some running on 24V or 6V. Transformers capable of supplying such a low voltage are subject to very high currents, so they must be suitably protected by means of a fuse or thermal circuit breaker, both on the primary circuit and on the secondary circuit. The fuse is to be chosen taking into consideration the current of the secondary circuit, which is more than 20 times as high as the input current. For example, in a 100VA transformer, supplied at 230V, the input current is 0.4A; but the output current (with a voltage of 12V) reaches 7.5A, a value comparable with the one present in a 2000W electric oven.
As a result of these currents, the wires that connect the lamp to the transformer must have a limited length and an adequate cross section, so as to reduce voltage drops. For further details, see the table below.

Table 1
S = CONDUCTOR CROSS SECTION
L = DISTANCE TRANSFORMER: LAMP

L \ S	1.0 **mm²**	1.5 **mm²**	2.5 **mm²**	4.0 **mm²**	6.0 **mm²**
1 **m**	120 **W**	180 **W**	240 **W**	380 **W**	550 **W**
2 **m**	80 **W**	110 **W**	200 **W**	320 **W**	500 **W**
4 **m**	40 **W**	55 **W**	140 **W**	160 **W**	250 **W**
6 **m**	25 **W**	35 **W**	65 **W**	100 **W**	160 **W**
8 **m**	20 **W**	25 **W**	50 **W**	80 **W**	120 **W**
1 **m**	10 **W**	20 **W**	40 **W**	65 **W**	100 **W**
			AMPERE-$\frac{W}{V}$		
	12 V=Wx1	**24 V=Wx2**	**6 V=W:2**		

To limit the installation costs, more than one lamp is normally powered by a single transformer. This choice is only correct if the following rules are respected. The power of the transformer must be equivalent to the sum of the powers of the lamps connected. In fact, an oversized transformer provides a voltage higher than 12V, determining a considerable reduction in the life of the lamp. For the various lamps to have an equivalent chromatic yield and light emission, the transformer connecting cables must have the same length. When one of the lamps connected burns out, it must be replaced quickly, to prevent the others – supplied with too much power – from deteriorating.

When the transformer for low-voltage lamps is not built into the Luminaire, it is necessary to choose one:

— that is suitable for assembly on flammable surfaces, that is, with the mark

— that is protected against solid foreign objects, that is, with a protection degree of IP 40.

— whose safety class is II

— the transformer must be suitable for assembly as an independent element

— if it is of a conventional type (HPF), the transformer must be a safety transformer resistant to short-circuits, over voltages and over temperatures

— if HF, the transformer must be immune to electromagnetic interference, in accordance with the EN61547 standard, and meet the requirements laid down by the EN61000-3-2 (harmonics) and EN55015 (radio interference) standards, if necessary, through the use of special attenuating filters

At this point, a comparison should be made between conventional transformers and HF ones. The latter ensure an almost completely constant output voltage even when there are marked fluctuations in the input voltage (with positive effects on the life of the lamp, which is about 20% longer than that of a lamp powered by a HPF transformer). Consider that an over voltage of 6% compared to the rated voltage (that is, a lamp voltage of 12.7V) reduces the life of the lamp by 50%. In addition, an excessive power supply causes the lamp to overheat, and resulting in the risk of starting a fire.

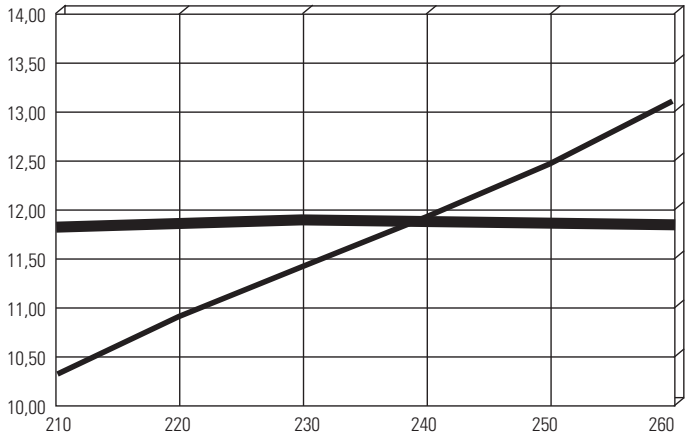

Finally, an exclusive feature of HF transformers is their excellent dimmer features, which enables the luminous flux to be regulated with the phase cut executed by a potentiometer.